Built-in Hob

INSTRUCTION BOOKLET

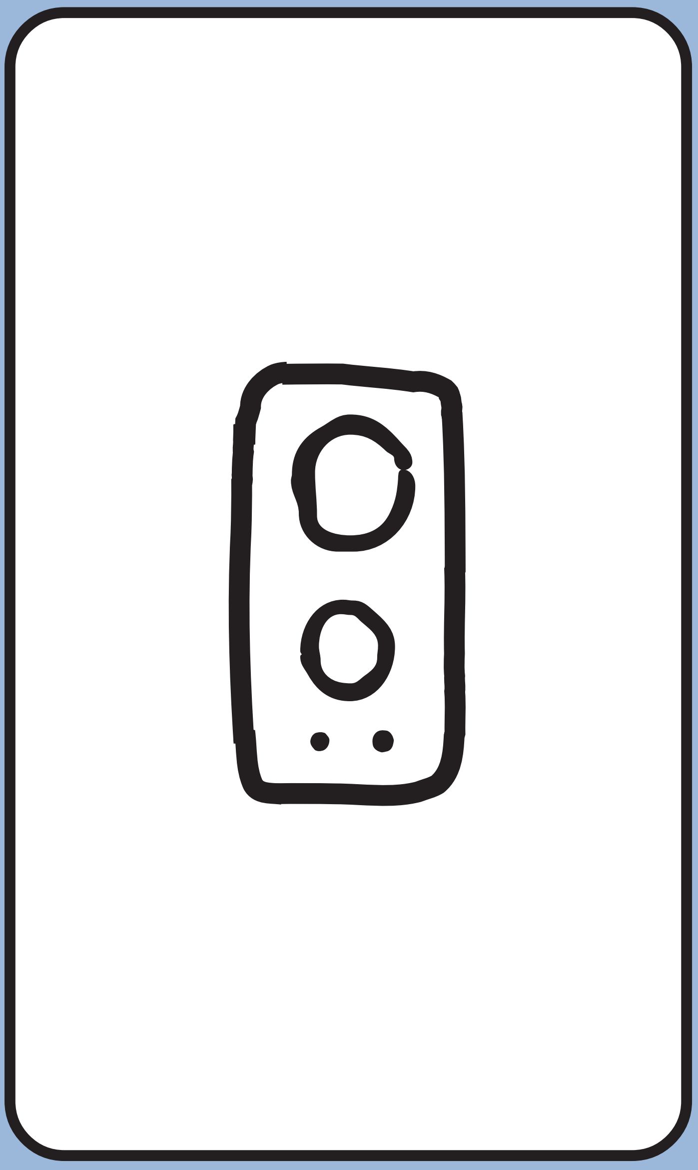

Mod. EHGT326X

35689-5601

Electrolux

HR-SI-CZ-SL-RO

ENGLISH

⚠ For Your Safety

These warnings are provided in the interest of safety. You MUST read them carefully before installing or using the appliance.
It is most important that this instruction book should be retained with the appliance for future reference. Should the appliance be sold or transferred, always ensure that the book is left with the appliance in order that the new owner can get to know the functions of the appliance and the relevant warnings.

During Operation

- This appliance has been designed to be operated by adults and children under supervision. Young children MUST NOT be allowed to tamper with the controls or play near or with the oven.
- This appliance has been designed for cooking edible foodstuff and to be used for domestic non-professional purposes only. It must not be used for any other purpose.
- It is **dangerous** to alter the specification in any way.
- For hygiene and safety reasons, this appliance should be kept clean at all times. A build-up of fats or other foodstuff could result in a fire.
- Accessible parts of this appliance may become hot when it is in use. Children should be KEPT AWAY until it has cooled.
- Under no circumstances should you attempt to repair the appliance yourself. Repairs carried out by unexperienced persons may cause injury or serious malfunctioning. Refer to your local Zanussi Service Centre. Always insist on genuine Zanussi spare parts.
- Ensure that all control knobs are in the OFF position when not in use.
- Should you connect any electrical tool to a plug near this cooking appliance, ensure that electric cables are not in contact with it and keep them far enough from the heated parts of this appliance.
- If the appliance is out of order, disconnect it from the electric supply.

About Installation, Cleaning and Manteinance

- It is mandatory that all operations required for the installation are carried out by a qualified or competent person, in accordance with existing rules and regulations.
- Disconnect the appliance from the electrical supply, before carrying out any cleaning or manteinance work.
- Ensure a good ventilation around the appliance. A poor air supply could cause lack of oxygen.
- Ensure that the gas supply complies with the gas type stated on the identification label, placed near the gas supply pipe.
- **The use of a gas cooking appliance results in the production of heat and moisture in the room in which it is installed. Ensure that the kitchen is well ventilated: keep natural ventilation holes open or install a mechanical ventilation device (mechanical extractor hood).**
- **Prolonged intensive use of the appliance may call for additional ventilation, for example opening of a window, or more effective ventilation, for example increasing the level of mechanical ventilation where present.**
- Once you removed all packaging from the appliance, ensure that it is not damaged and the electric cable is in perfect conditions. Otherwise, contact your dealer before proceeding with the installation.
- **The manufacturer disclaims any responsability should all the safety measures not be carried out.**

The symbol on the product or on its packaging indicates that this product may not be treated as household waste. Instead it shall be handed over to the applicable collection point for the recycling of electrical and electronic equipment. By ensuring this product is disposed of correctly, you will help prevent potential negative consequences for the environment and human health, which could otherwise be caused by inappropriate waste handling of this product. For more detailed information about recycling of this product, please contact your local city office, your household waste disposal service or the shop where you purchased the product.

MANUFACTURER:
ELECTROLUX HOME PRODUCTS ITALY S.p.A.
Viale Bologna 298 - 47100 FORLI' (Italy)

These instructions are only for the countries stated by the symbol printed on the front cover of this instruction book.

Contents

Description of the appliance 3
Instruction for the User 3
Cleaning and Maintenance 4
Guarantee - After Sales Service 5
Technical Data 6
Instruction for the Installer 6
Electrical Connection 7
Adaptation to different types of gas 8
Building In 9

Guide to Use the instructions

The following symbols will be found in the text to guide you throughout the Instructions:

Safety Instructions

Step by step instructions for an operation

Hints and Tips

Environmental information

Description of the appliance

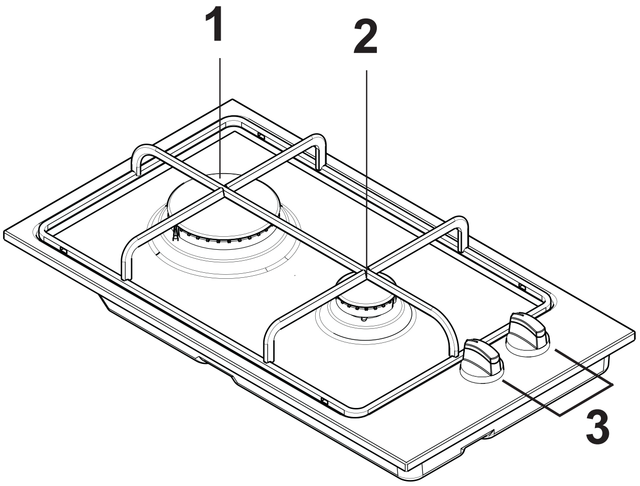

1 Rapid Burner - 3,0 kW

2 Auxiliary Burner - 1,0 kW

3 Burner Control Knobs

Instruction for the User

Burner Control Knobs

The hob burner control knobs are situated on the hob front panel. The symbols on the knobs mean that :

● there is no gas supply

there is maximum gas supply / Ignition setting

there is minimum gas supply

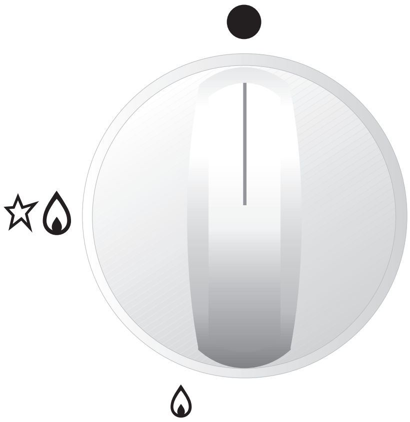

Lighting the burners

For easier lighting, proceed before putting a pan on the pan support.

1. Push the relevant knob down and turn it anti-clockwise until it reaches the "maximum" position.
2. After lighting the flame, keep the knob pushed down for about 5 seconds. This will allow the "thermocouple" (Fig. 1 lett. D) to be heated and the safety device to be switched off, otherwise the gas supply would be interrupted.
3. Then, check the flame is regular and adjust it as required.

If you cannot light the flame even after several attempts, check the "cap" (Fig. 1 lett. A) and the "crown" (Fig. 1 lett. B) are in the correct position.

To put the flame out, turn the knob to the symbol ●.

In the absence of electricity, ignition can occur without the electrical device; in this case approach the burner with a flame, push the relevant knob down and turn it anti-clockwise until it reaches the "maximum" position.

Always turn the flame down or put it out before taking the pans off the burner.
Carefully supervise cookings with **fats or oil**, since these types of foodstuff can result in a fire, if over-heated.

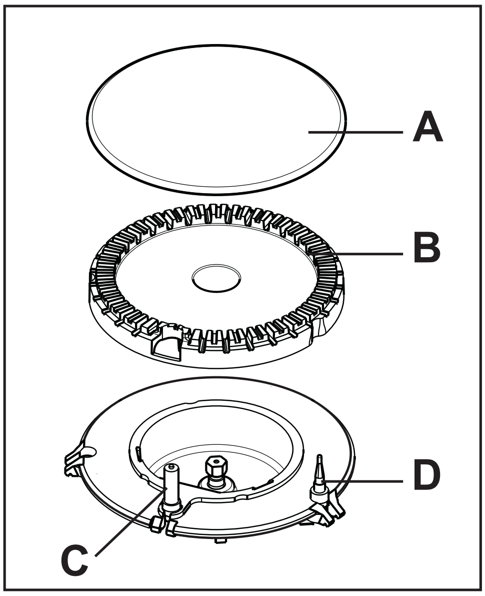

Fig. 1

Energy saving advices

To ensure maximum burner efficiency, it is strongly recommended that you use only pots and pans with a bottom fitting the size of the burner used, so that flame will not spread beyond the bottom of the vessel (see the table beside).
It is also advisable, as soon as a liquid starts boiling, to turn down the flame so that it will barely keep the liquid simmering.

- **Use only pans or pots with flat bottom.**

Burner	minimum diameter	maximum diameter
Rapid	180 mm.	260 mm.
Auxiliary	80 mm.	160 mm.

Cleaning and Maintenance

Disconnect the appliance from the electrical supply, before carrying out any cleaning or manteinance work.

This appliance cannot be cleaned with steam or with a steam cleaning machine.

Wash the enamelled components with warm soapy water. Never use abrasive cleaners
Frequently wash the "caps" and the "crowns" with hot soapy water, carefully taking away any built-up of food.
Carefully wash the stainless steel components with water, then wipe them dry with a soft cloth.
The pan supports are dishwasher proof.
If the marks are particularly difficult to remove, use common non-abrasive cleaners or specific products.
Never use steel wool pads or acids.
In models provided with electric ignition, this feature is obtained through a ceramic "candle" and a metal electrode (Fig. 1 lett. C). Keep these components well clean, to avoid difficult lighting, and check that the burner crown holes (lett. B) are not obstructed.

Periodic maintenance

Periodically ask your local Service Centre to check the conditions of the gas supply pipe and the pressure adjuster, if fitted.
To ensure the good operation of the hob and its safety features, it is necessary that the taps are periodically lubricated.

- **The periodic lubrication of the taps must be carried out by qualified personnel, which you must refer to also in case of malfunctioning.**

Guarantee - After Sales Service

Original spare parts

This appliance, before leaving the factory, has been tested and studied by many experts and specialists, in order to give you the best results.
Any repair work which needs to be carried out should be done with the utmost care and attention.
For this reason we reccomend that for any problem you contact the dealer who sold it to you, or our nearest authorized Service Centre, specifying the nature of the problem and the particular model which you own.
Original spare parts, certified by the manufacturer of the product and marked with the following sign,

Electrolux Distriparts

can only be found at our approved Technical Assistance Centres and in authorised Spare Parts Shops.

Technical Data

Gas Burners Rating

Rapid Burner (big)	3,0 kW (G20) - 2,8 kW (G30/G31)
Auxiliary Burner (small)	1,0 kW
Class 3 Appliance	
Category	II2H3B/P
Setting	Natural Gas G20 - 20 mbar
Gas connection	G 1/2"
Electric Supply	230 V 50 Hz

Hob recess dimensions

Length	270 mm.
Width	490 mm.

CE This appliance complies with the following E.E.C. Directives:
- **73/23 - 90/683** (Low Voltage Directive);
- **89/336** (Electromagnetical Compatibility Directive);
- **90/396** (Gas Appliances)
- **93/68** (General Directives)

and subsequent modifications.

Instruction for the Installer

The following instructions about installation and maintenance must be carried out by qualified personnel in compliance with the regulation in force.

The appliance must be electrically disconnected before all interventions. If any electric supply to the appliance is required to carry out the work, ensure all the necessary precautions are followed.

The side walls of the unit in which the hob is going to be installed, must not exceed the height of the working top.

Avoid installing the appliance in the proximity of inflammable materials (e.g. curtains, tea towels etc.).

Gas connection

If using flexible metallic pipes, be careful they do not come in contact with mobile parts or they are not squeezed. Use the same attention when the hob is combinated with an oven.

This hob is set to operate with natural gas with nominal pressure of 20 mbar. No regulation is required for use by this type of gas.

IMPORTANT - To ensure a correct operation, a saving of energy and the long-life of the appliance, the voltage pressure of the appliance must correspond to the recommended values.

Before fitting the appliance ensure that the installation has the correct voltage for the appliance. At full capacity, the drop in pressure must not exceed 5%. Such a drop in pressure is caused by the following parameters:
- maximum capacity of meter;
- diameter and lenght of the tube in front and behind the meter;
- section of transit of variuos tubes positioned on the circuit;
- diameter of eventual connections.

The adjustable connection is fixed to the comprehensive ramp by means of a threaded nut G 1/2". Insert the supplied washer between the ramp and the adjustable connection.

IMPORTANT - When the final connection has been made, it is essential that a thorough leak test is carried out on the hob and installation. Use some soapy water, **never a flame.**

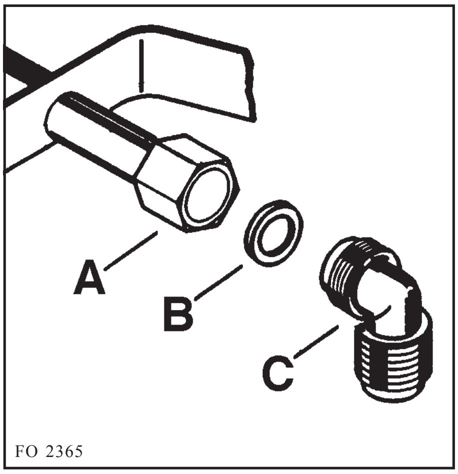

Fig. 2

A) Ramp with ending nut
B) Washer
C) Adjustable connection

Electrical Connection

The appliance is designed to be connected to 230 V monophase electricity supply.

The connection must be carried out in compliance with the laws and regulations in force.

Before the appliance is connected:

1. check that the main fuse and the domestic installation can support the load (see the rating label);
2. check that the power supply is properly earthed in compliance with the current rules;
3. check the socket or the double pole switch used for the electrical connection can be easily reached with the appliance built in the forniture unit.

The appliance is supplied with a connection cable. This has to be provided with a proper plug, able to support the load marked on the identification plate. To connect the plug to the cable, follow the recommendation given in Fig.3. The plug has to be fitted in a proper socket.
If connecting the appliance directly to the electric system, it is necessary that you install a double pole switch between the appliance and the electricity supply, with a minimum gap of 3 mm. between the switch contacts and of a type suitable for the required load in compliance with the current rules.
The connection cable has to be placed in order that, in each part, it cannot reach a temperature 90 °C higher than the room temperature.
The brown coloured phase cable (fitted in the terminal block contact marked with "L") must always be connected to the network phase.

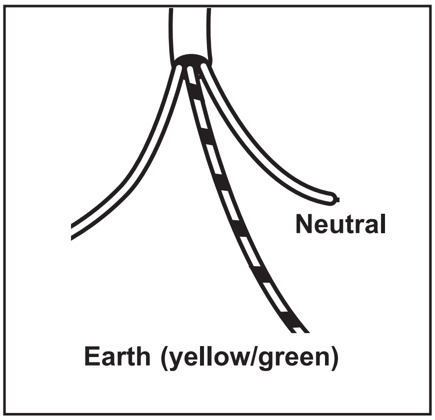

Fig. 3

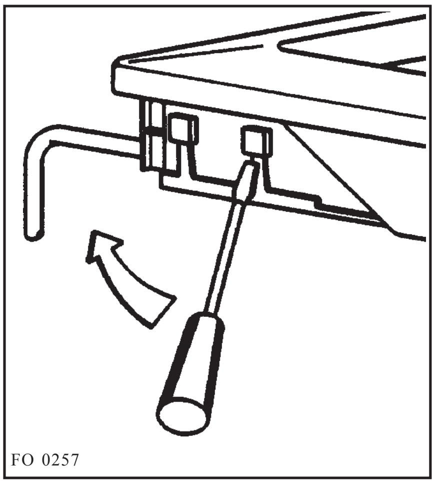

Fig. 4

Replacement of the connection cable

The connection of the connection cable to the appliance's terminal block is of type "Y". This means that its replacement requires the specific equipment of a technician.

In this case, only cable type H05V2V2-F T90 must be used. The cable section must be suitable to the voltage and the working temperature.
The yellow/green earth wire must be approximately 2 cm longer than the phase wires (Fig. 3).

To open the terminal block and reach the terminals, proceed as follows:

1. insert the point of a screwdriver into the visible protrunding part of the terminal block;
2. exert a light pressure and lift (Fig. 4)

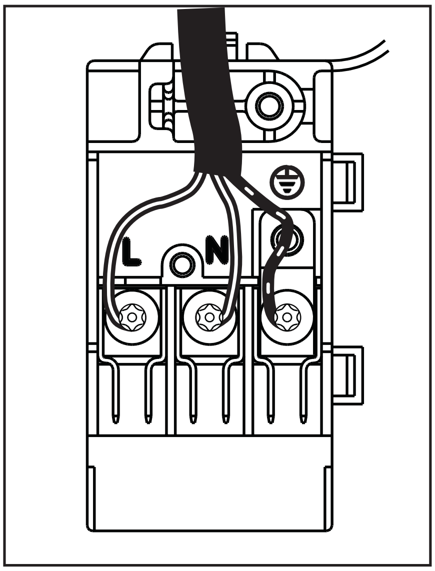

Fig. 5

Adaptation to different types of gas

Replacing the burner injectors

1. Remove the pan supports.
2. Remove the burner's caps and crowns.
3. With a socket spanner 7 unscrew and remove the injectors (Fig. 6), and replace them with the ones required for the type of gas in use (see **Table 2**).
4. Reassemble the parts, following the same procedure backwards.
5. Replace the rating label (placed near the gas supply pipe) with the relevant one for the new type of gas supply. You can find this label in the package of the injectors supplied with the appliance.

Should the feeding gas pressure be different or variable compared with the required pressure, an appropriate pressure adjuster must be fitted on the gas supply pipe, in compliance with the rules in force.

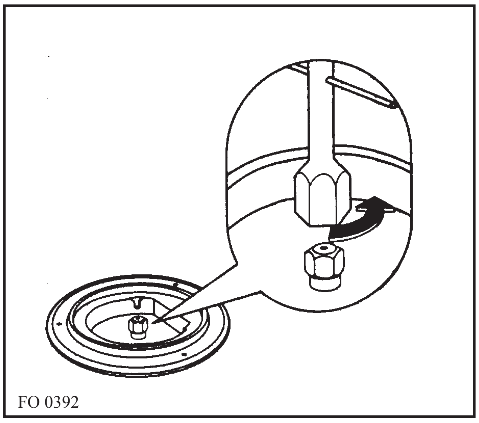

Fig. 6

Adjusting the minimum level

To adjust the minimum level of the burners, proceed as follows:

1. Light the burner.
2. Turn the knob on the minimum position.
3. Remove the knob.
4. With a thin screwdriver, adjust the by-pass screw (see Fig. 7). If changing from natural gas to LPG, completely tighten clockwise the screw, until a small regular flame is obtained.
5. Finally check the flame does not go out when quickly turning the knob from the maximum position to the minimum position.

This procedure can easily be carried out, anyhow the hob has been positioned or built in the working top.

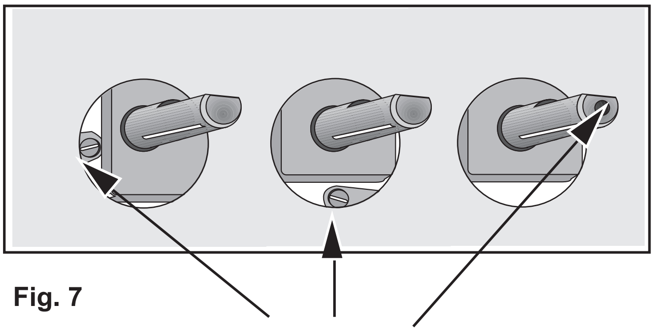

Fig. 7

Table 1 : BY-pass diameters

Burner	Ø By-pass in 1/100 of mm.
Auxiliary	28
Rapid	42

Table 2 : injectors

BURNER	NORMAL POWER kW	REDUCED POWER kW	NORMAL POWER				
			NATURAL GAS G20 20 mbar		LPG G30/G31 28-30 mbar		
			inj. 1/100	m³/h	inj. 1/100	g/h - G30	g/h - G31
Auxiliary (small)	1,0	0,33	70	0,095	50	72	71
Rapid (big)	Natural gas : 3,0 LPG : 2,8	0,65	119	0,286	86	203	200

Building In

Fig. 8

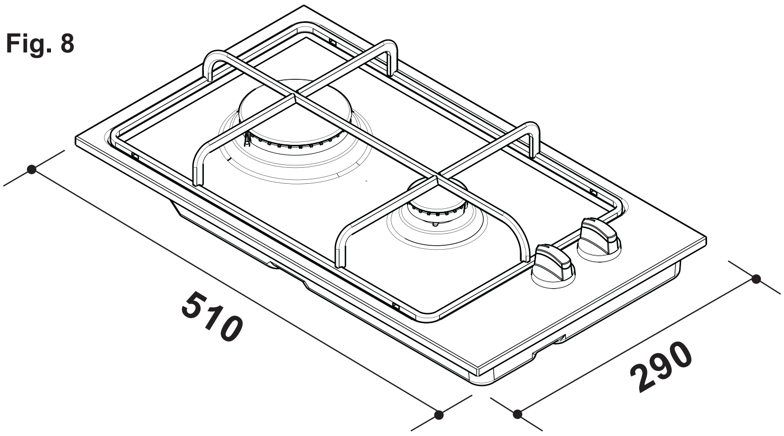

These hobs can be inserted in a built-in kitchen unit whose depth is between 550 and 600 mm. The hobs dimensions are shown in Fig. 8.

Installation and assembly

These hobs can be installed in a kitchen unit with an opening for insertion whose dimensions are shown in Fig. 9.

The edge of the cut out must have a minimum distance from the rear wall of 55 mm.
If there are side walls, or sides of the furniture unit near the hob, the cut out edges must have a minimum distance of 100 mm.
Hanging forniture units or hoods must be placed at 650 mm minimum from the hob.

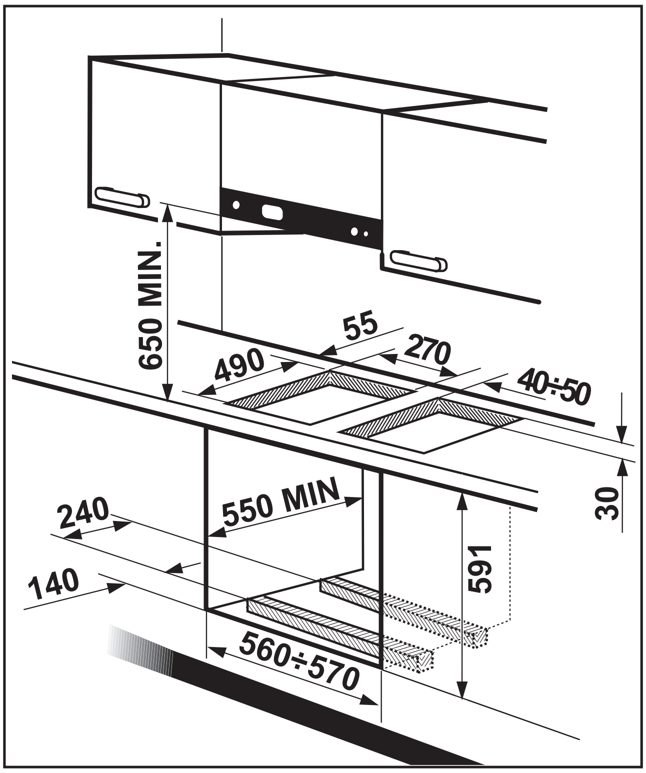

Fig. 9

Carry out the building in of the hob as follows:

1. Put the relevant sealings, supplied with the hob, on the edges of the cut out, taking care that the sealings meet without overlapping;
2. place the hob in the cut out, taking care of its centring;
3. fix the hob with the relevant screws (Fig. 10). The traction of the screws is able to trace the sealing, any excess of which can then be easily removed.

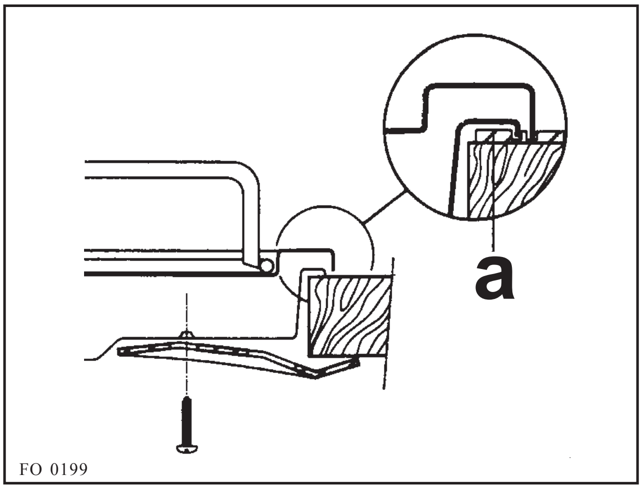

a) sealing

Fig. 10

If several 30cm hob are to be installed side by side into the same cut out, an assembly kit including a support side bracket and supplementary sealings is available at our After Sales Centres. The relevant installation instructions are supplied within the kit package.

Possibilities for insertion

Kitchen unit with door

Proper arrangements must be taken in designing the forniture unit, in order to avoid any contact with the bottom of the hob which can be heated when it is operated. The recommended solution is shown in Fig.11.
The panel fitted under the hob should be easily removable to allow an easy access if a technical assistance intervention is needed.

Kitchen unit with oven

The hob recess dimensions must comply the indication given in Fig.9 and must be provided with brackets to allow a continuous supply of air.
To avoid overhating, the building in should be carried out as shown in Figs. 12 and 13.
The hob's electric connection and the oven's one must be carried out separately, both for safety reasons and to allow the oven to be easily taken off the unit.

Fig. 11

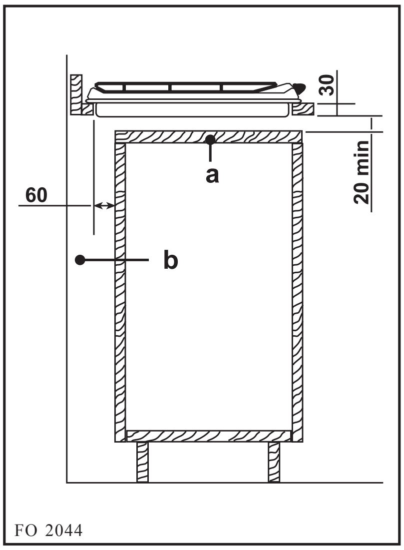

a) Removable panel
b) Space possibly useful for connections

Fig. 12

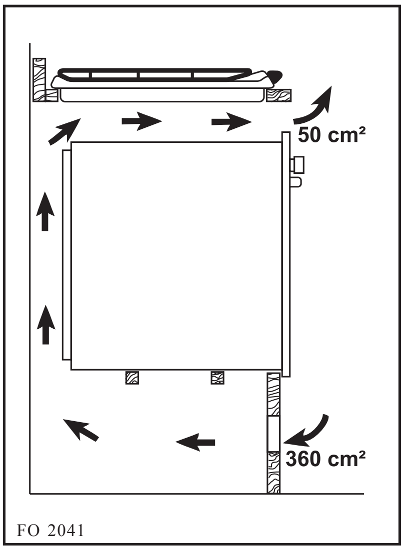

Fig. 13

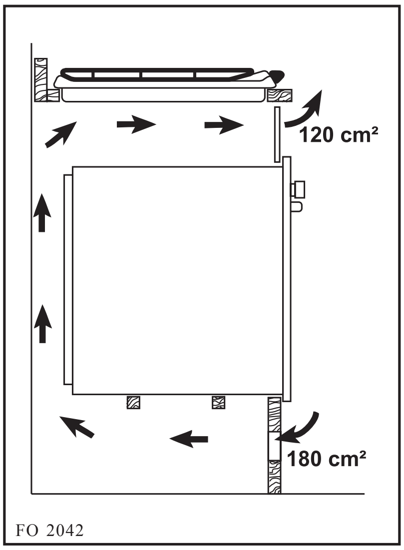

Grafiche MDM - Forlì

From the Electrolux Group. *The world's No.1 choice.*

The Electrolux Group is the world's largest producer of powered appliances for kitchen, cleaning and outdoor use. More than 55 million Electrolux Group products (such as refrigerators, cookers, washing machines, vacuum cleaners, chain saws and lawn mowers) are sold each year to a value of approx. USD 14 billion in more than 150 countries around the world.

03/05